LEEM Filtration
25 Arrow Road • Ramsey, NJ 07446
Phone: (201) 236-4833 • Fax: (201) 236-2004
www.leemfiltration.com

WEDGE FLOW

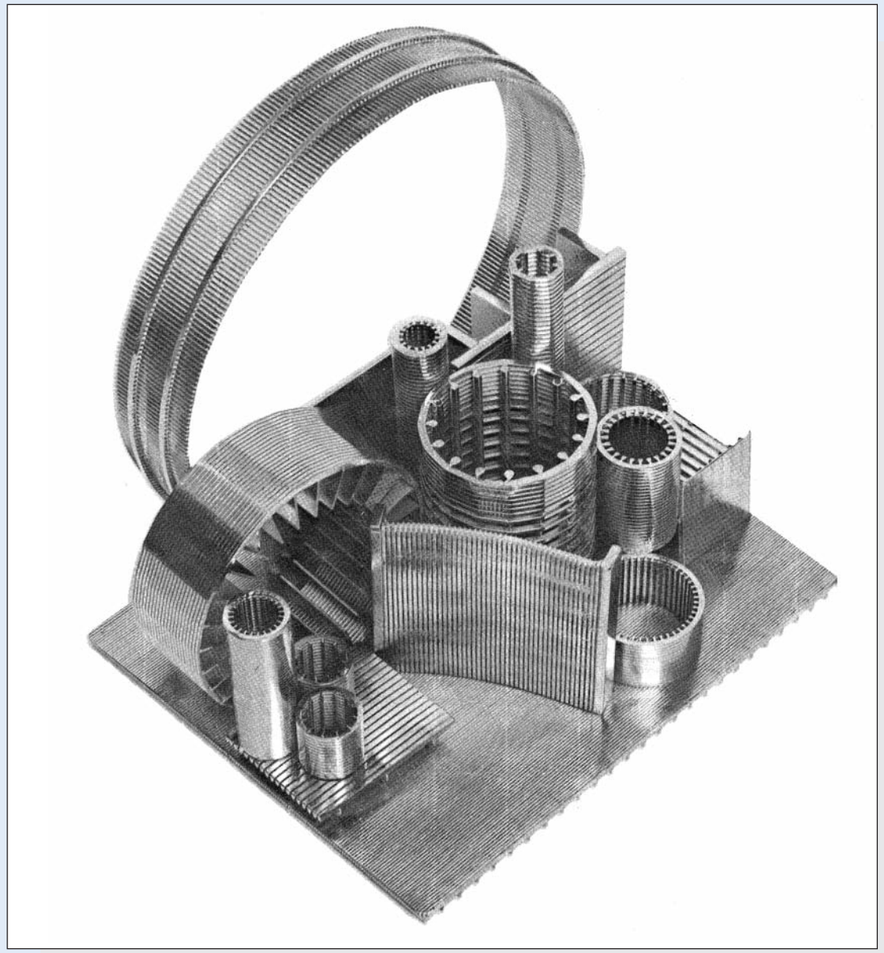

CUSTOM ENGINEERED WEDGE WIRE SCREEN PRODUCTS
FOR THE WATER TREATMENT AND PROCESS INDUSTRIES

FACTS ABOUT "WEDGE-FLOW®"

The ***quality*** of the final product begins long before actual production. Alloy, temper, profile shapes, rod type as well as machine selection are just a few of the ingredients that must be controlled to maintain LEEM's ***high standards*** for "WEDGE-FLOW®."

It is this attention to detail and commitment to quality that has resulted in the enviable reputation of LEEM "WEDGE-FLOW®" screen products.

"WEDGE-FLOW®" is manufactured by an exclusive process of continuously welding an outer profile wire circumferentially in a helix pattern to a series of longitudinal support rods.

The helix wrap pattern in combination with the width of the profile wire determines the slot size.

"WEDGE-FLOW®" is manufactured in cylinders from 7/16" to 60" diameter with slot sizes from .002".

Alloys available include the stainless steels and "ELC" grades as well as alloy 400, C-276 and CB-20.

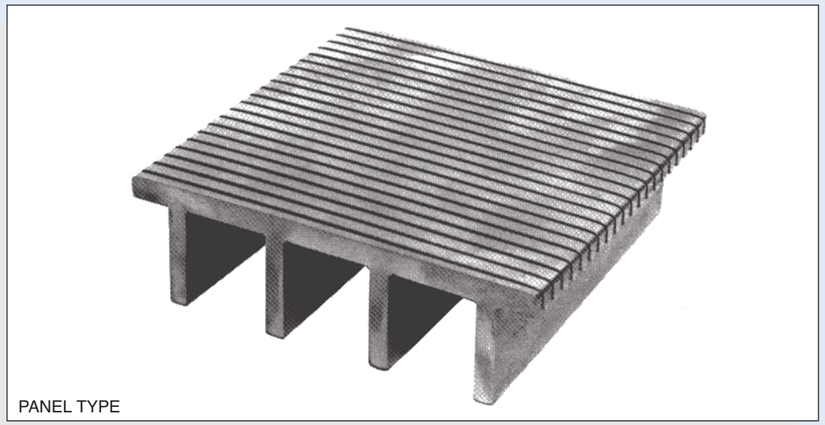

PANEL TYPE

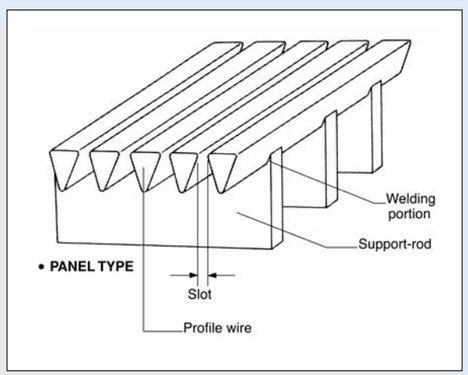

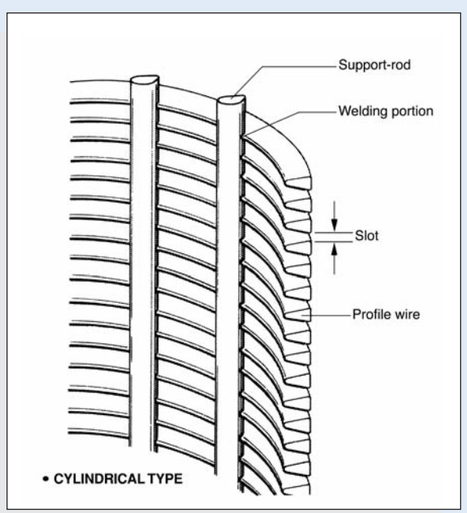

CYLINDRICAL TYPE

DID YOU KNOW:

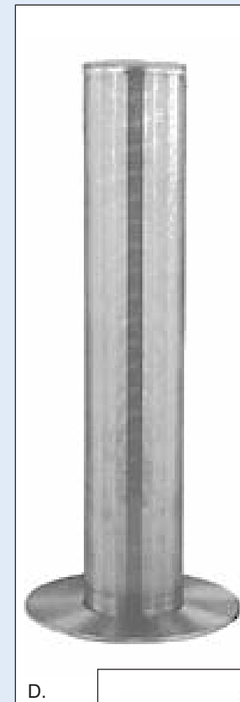

D.

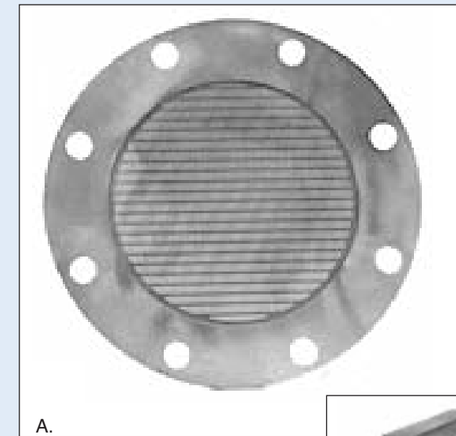

A.

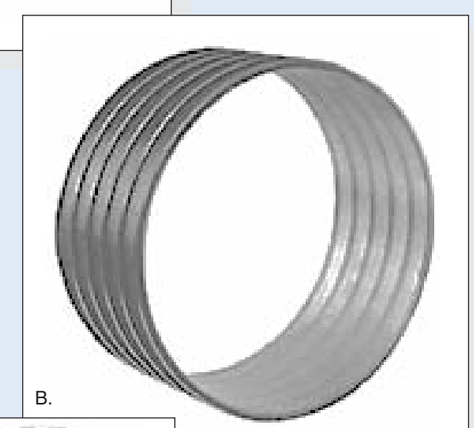

B.

F.

The design and fabrication versatility of LEEM "WEDGE-FLOW®" results in the ideal filter component for the fluid treatment industries.

- Resistance to clogging
- High strength
- Easily cleaned
- Alloy availability
- Low cost
- Short lead times

A. Flat plate strainer for 8," 300# line. Alloy 20, .010" retention.
B. Reverse rolled screen, 9" I.D. x 4" lg., .007" longitudinal slot, S/S316.
C. Sanitary element with removable cover for internal cleaning.
D. Replacement resin trap basket, .012" slot for 4" spool.
E. Drain septa for activated carbon vessel. 2" coupling connection.
F. Flat "WEDGEFLOW®" cartridge for polymer extrusion process. .005" slot, S/S316L.
G. Conical "WEDGE FLOW®" strainer for 6" line. Designed for 300 psi collapse differential.

LEEM would welcome the opportunity to work with you on YOUR special project.

E.

G.

C.

CUSTOM DESIGNED LATERALS

LEEM "WEDGE-FLOW®" laterals are ***custom designed*** as replacements for existing installations.

Exact replacement is accommodated as well as re-engineered to improve process fluid dynamics. Often, with LEEM's ***"Back to Basics"*** approach, major improvements can be realized without increasing costs.

Retention, drainage patterns, and alloy selection are a few of the criteria that can result in pro-cess improvements.

Careful consideration to existing internal configurations can result in avoiding unnecessary major capital expense.

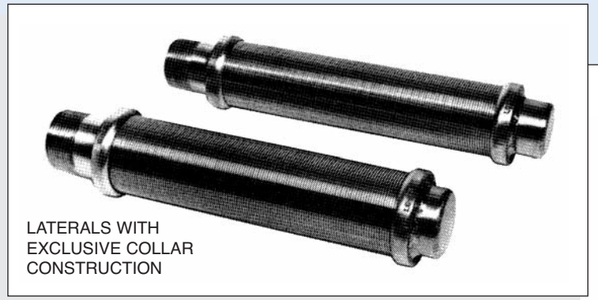

LATERALS WITH EXCLUSIVE COLLAR CONSTRUCTION

REPLACEMENT LATERALS

TRAP STRAINERS

Retention, fluid viscosity, specific gravity, corrosion rate, and pressure drop are all important factors in the design of LEEM trap strainers.

LEEM strainers are fabricated to your requirements by A.S.M.E. certified welders. Reverse flow, backwash, gauges, drain connections and sight glasses can all be economically incorporated.

"WEDGEFLOW®" baskets are supplied as standard, assuring retention integrity and ease of maintenance. Baskets can be designed to withstand full line pressure in either flow direction.

LEEM **"Resin"** trap strainers conform to standard industrial dimensions and are used throughout the water and process treatment industries.

SIZE	1	1-1/4"	1-1/2"	2"	2-1/2"	3"	4"	6"	8"	10"	12"
A	7-1/2	10-1/2	10-1/2	10-1/2	14-1/2	14-1/2	18-1/8	22-5/8	28-1/8	32-5/8	33-1/2
B	6-3/8	10-1/4	10-1/4	10-1/4	13-7/8	13-7/8	13-1/2	19-1/4	28	31-1/2	43-7/8
C	3-1/8	3-5/8	3-5/8	3-5/8	4-1/2	4-1/2	8-1/4	10-5/8	12-1/2	15-1/2	10-3/4
D	3/4	3/4	3/4	3/4	1	1	1-1/2	2	2	2	2

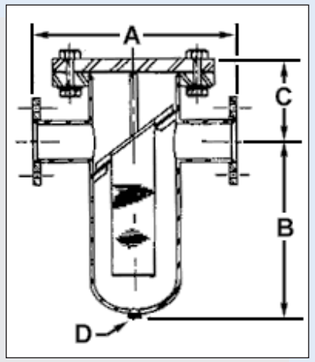

TRAP STRAINER
4" SIZE 316L SS

SCREEN NOZZLES

NOZZLE STYLE "N"

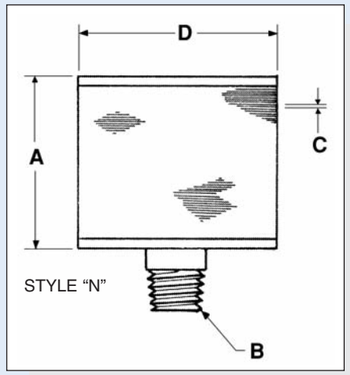

STYLE "N"

MODEL #	A	B	C	O.A.	D
N20-75	1 11/16"	3/4" NPT	.007"	.98 sq. in.	2.00"
N30-75	1 11/16"	3/4" NPT	.007"	1.57 sq. in.	3.00"
N20-10	1 11/16"	1.0" NPT	.007"	.98 sq. in.	2.00"
N30-10	1 11/16"	1.0" NPT	.007"	1.57 sq. in.	3.00"

Note: .012" Slot increases O.A. 59%

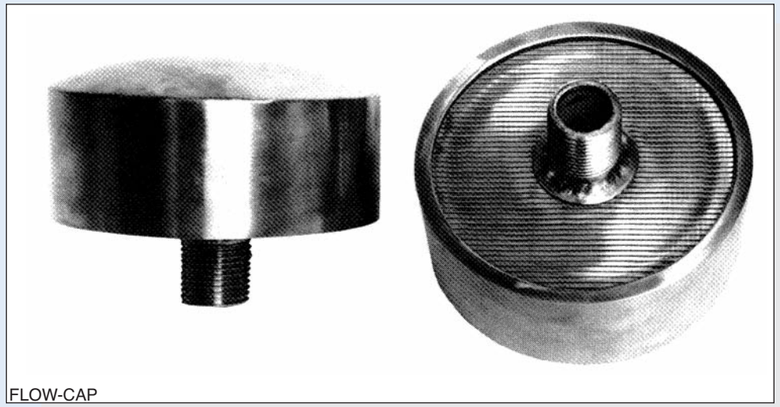

FLOW-CAP

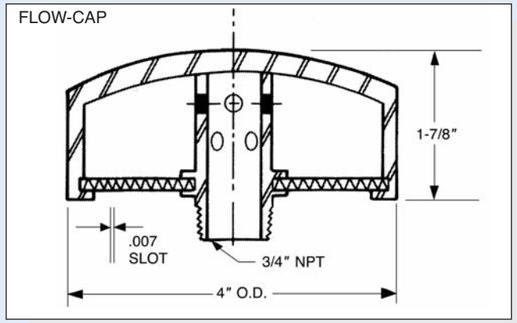

LEEM "WEDGE-FLOW®" screen nozzles have distinct advantages in that they are economical, nonclogging and ideally suited as collectors and distributors.

The most common standard nozzle is style "N" as shown. Efficient and easily installed in false bottom installations, as well as in combination with lateral systems.

Standard "T" bolt, coupling and custom designed connections are equally available.

The ***exclusive*** LEEM "FLOW-CAP" nozzle, pictured below, has additional process advantages.

- Eliminates stagnant media on vessel bottom.
- Reduces abrasion of filter surface caused by vertical bed movement.
- Precisely controlled flow characterisics.
- Domed design is ideally sutied for high pressure applications.
- Also available as replacements for existing installations.

"FLOW-CAP," cylindrical, or custom designed, LEEM FILTRATION will provide ***complete engineering*** assistance in the design and selection of nozzle internal systems.

LATERAL SYSTEMS

LEEM "WEDGE-FLOW®" lateral systems are ***precision engineered*** to maximize bed utilization and provide uniform collection and distribution patterns. LEEM offers complete engineering assistance in the design and development of new systems as well as improving and replacing existing installations.

HUB LATERALS

This design is commonly used in sand filtration, activated carbon columns, and demineralizer vessels up to 8' diameter.

"WEDGE-FLOW®" laterals are often designed in a multi-tier pattern as well as angled to conform to the vessel head configuration.

HEADER-LATERALS

"WEDGE-FLOW®" header-lateral systems are designed as collectors and distributors in larger vessels. These are optimum systems where mid-bed or regenerant processes are employed.

Units are ***custom designed*** for either side or center vessel configuration and can accomodate threaded, nozzle or pad connections.

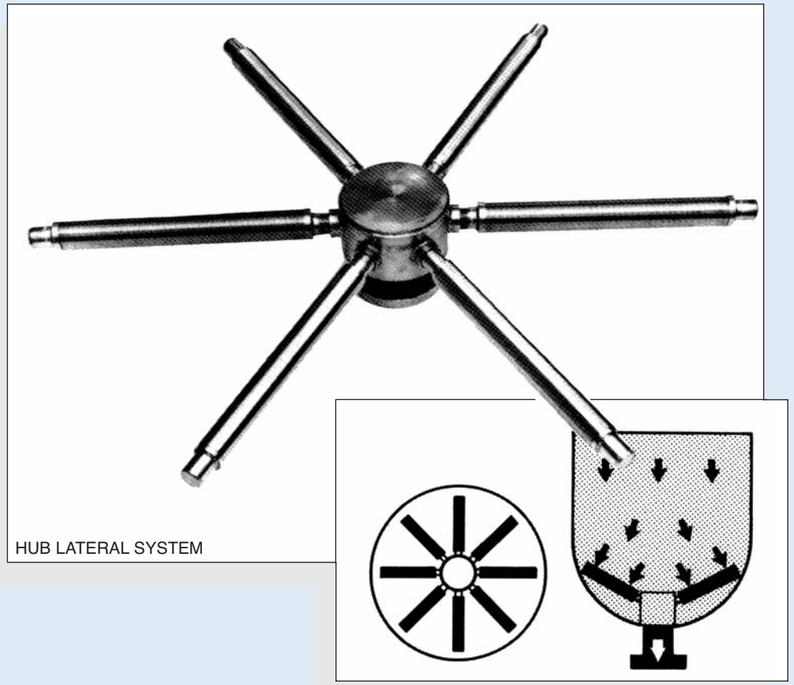

HUB LATERAL SYSTEM

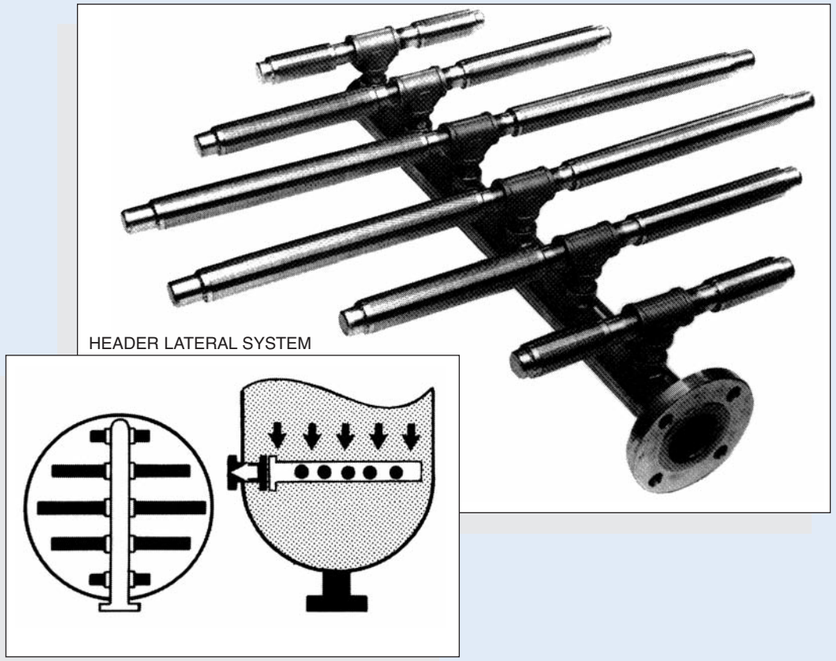

HEADER LATERAL SYSTEM

FLAT UNDERDRAINS

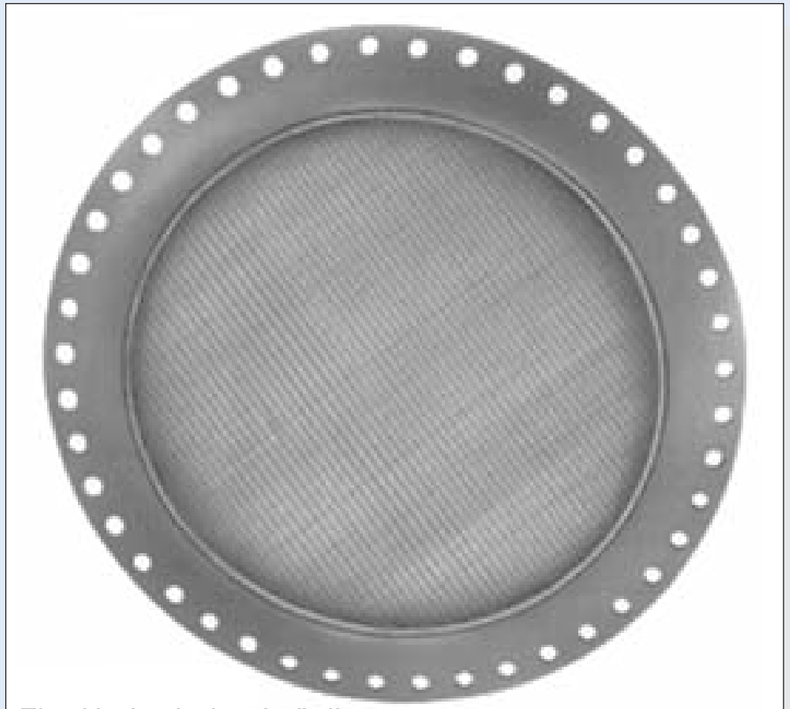

Flat Underdrain 6'-0" dia.

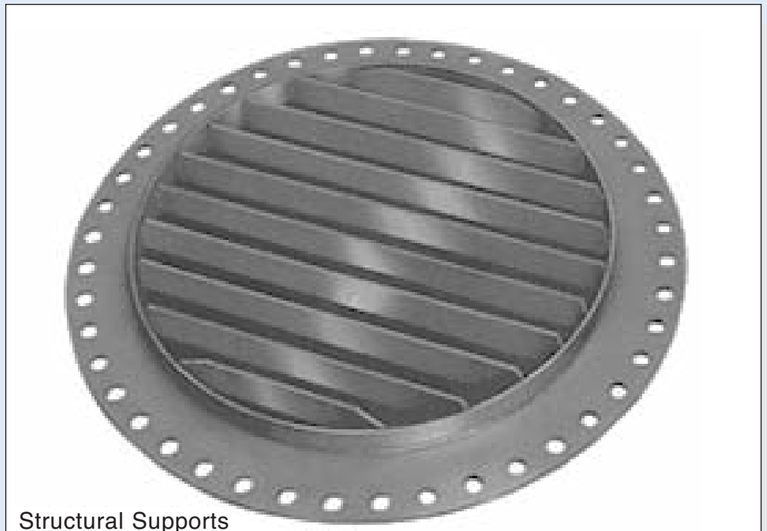

Structural Supports
Designed for 150 PSI System

"WEDGE-FLOW®" product ***quality*** is an absolute necessity in the design and manufacture of flat retention screens.

Slot sizes of .005" to .018" are required for resin, sand and car-bon columns. In addition, massive support structure, capable of withstanding up to 150 psi and higher pressure dif-ferentials, is often required.

The importance of engineering expertise and ***attention to detail*** during production cannot be understated. Our A.S.M.E. certified welders are in constant communication with engineering during all phases of design and manufacture.

Retaining screens are commonly installed by welding directly to the vessel, and become a vital, integral part of the process.

It is this understanding of process requirements that guides LEEM FILTRATION from the onset of your project.